Conceptual View of Memory Cell

- Truth tables of logic gates

Recap: Truth tables of Logic gates

AND Gate

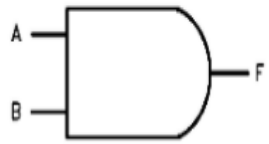

INPUT		OUTPUT
A	B	F
0	0	0
0	1	0
1	0	0
1	1	1

OR Gate

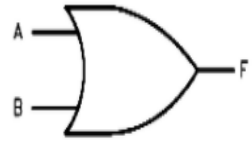

INPUT		OUTPUT
A	B	F
0	0	0
0	1	1
1	0	1
1	1	1

NOT Gate

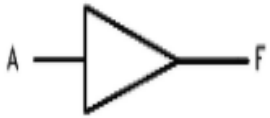

INPUT	OUTPUT
A	F
0	1
1	0

NAND Gate

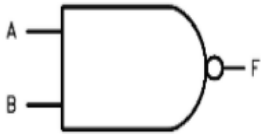

INPUT		OUTPUT
A	B	F
0	0	1
0	1	1
1	0	1
1	1	0

NOR Gate

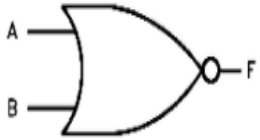

INPUT		OUTPUT
A	B	F
0	0	1
0	1	0
1	0	0
1	1	0

Exclusive OR Gate

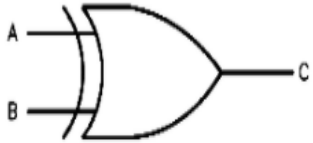

INPUT		OUTPUT
A	B	C
0	0	0
0	1	1
1	0	1
1	1	0

- Truth tables of logic gates
- circuitry of memory cell

Conceptual View of Memory Cell

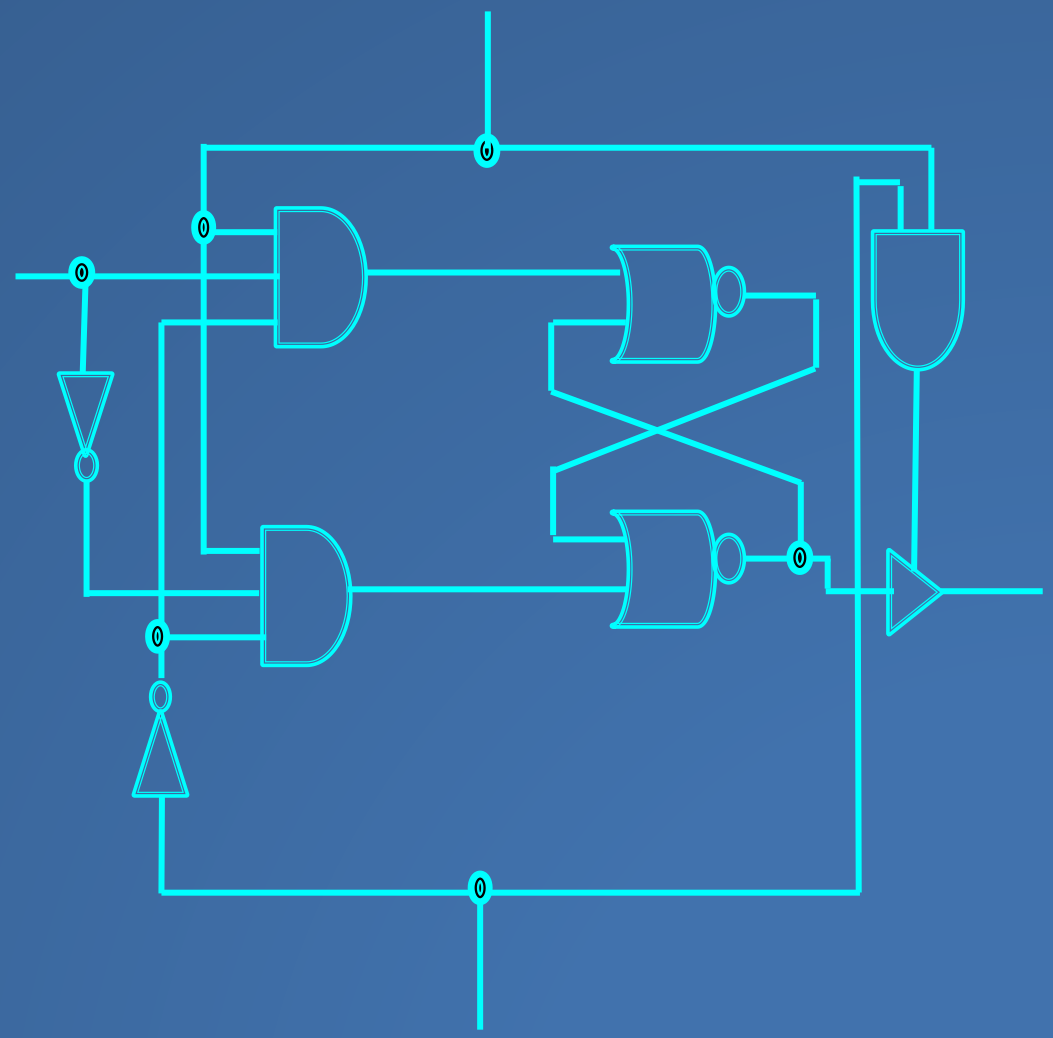

- Truth tables of logic gates
- circuitry of memory cell
- Function of Memory Cell

Function of Memory Cell

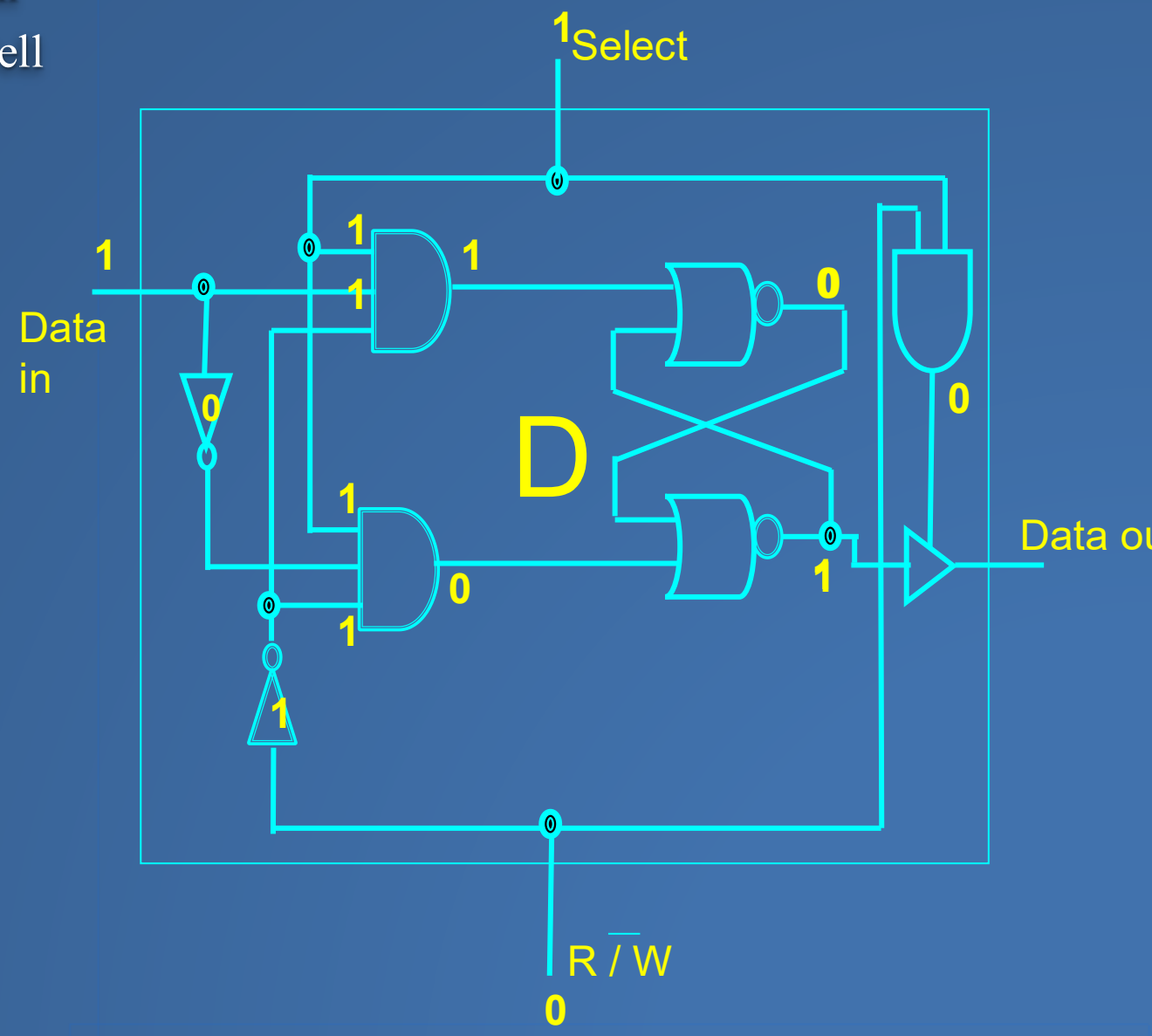

- Truth tables of logic gates
- circuitry of memory cell
- Function of Memory Cell

Function of Memory Cell

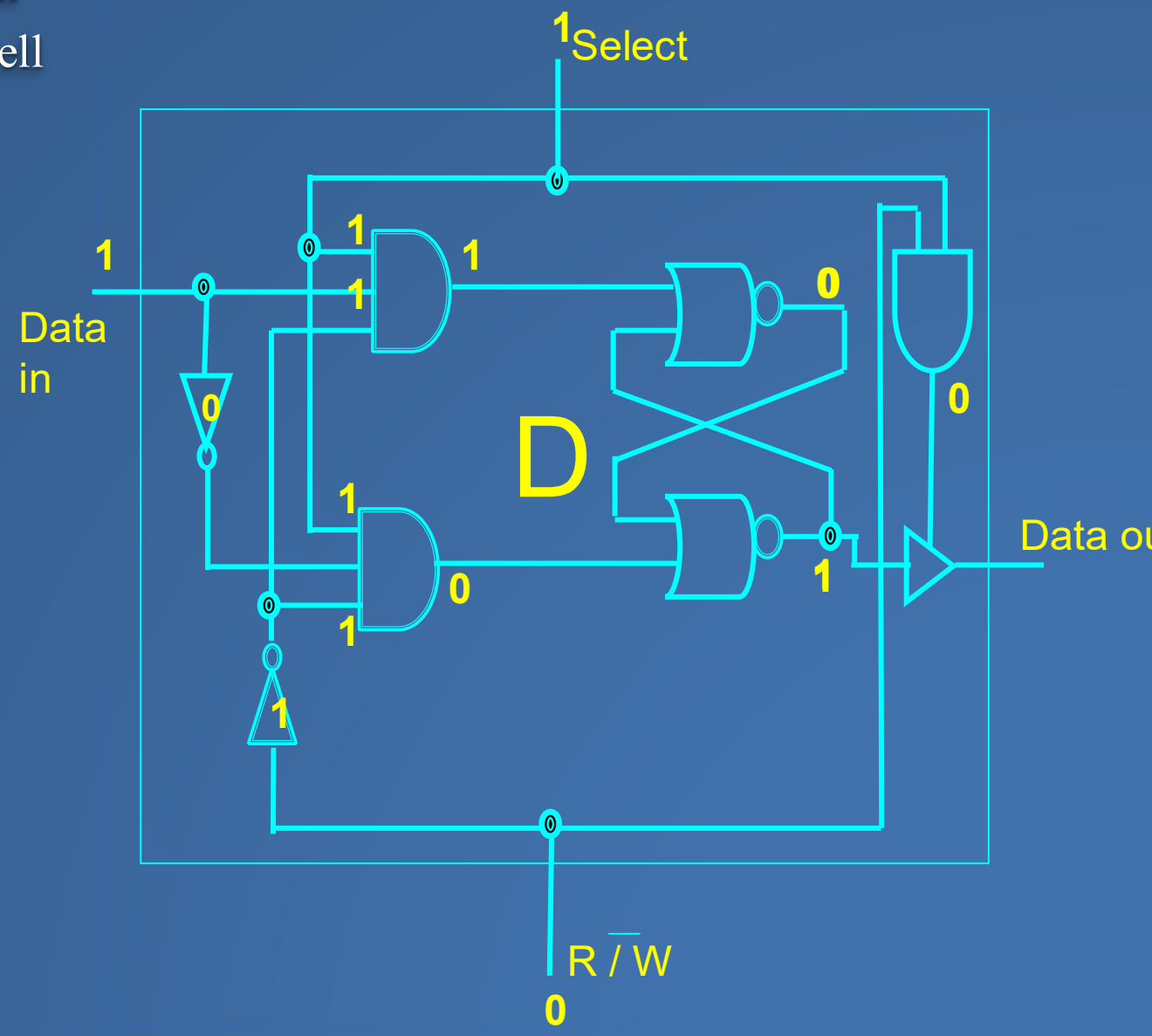

Memory Organization

- Truth tables of logic gates
- circuitry of memory cell
- Function of Memory Cell
- Memory Organization

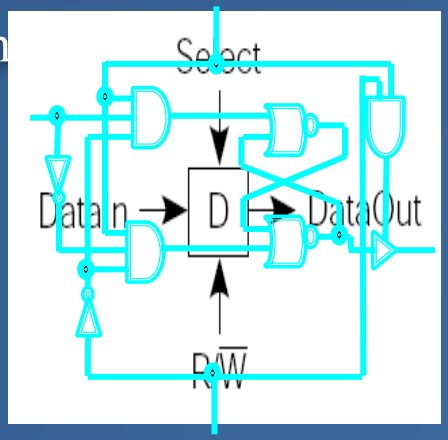

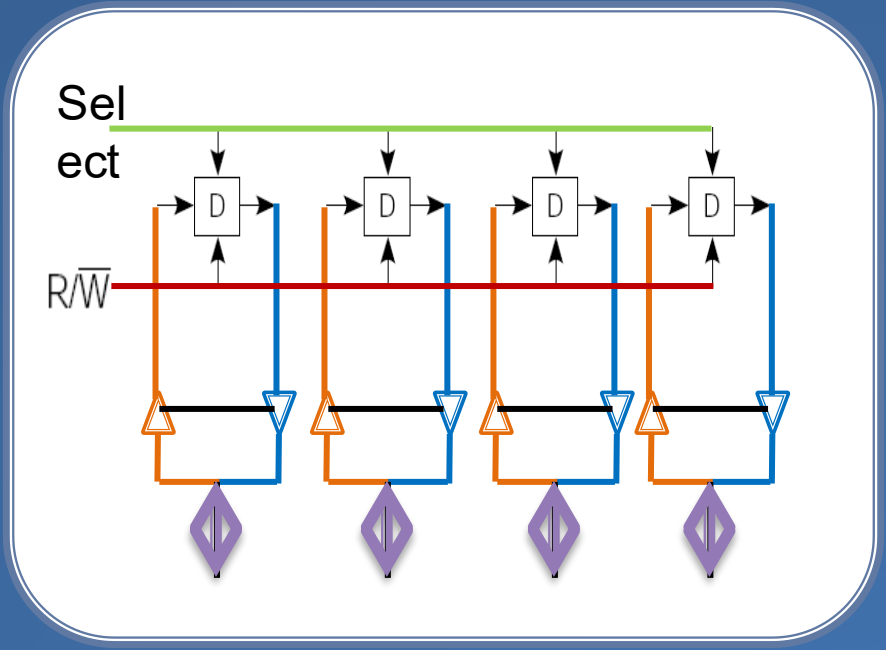

Memory Organization

- Truth tables of logic gates
- circuitry of memory cell
- Function of Memory Ce
- Memory Organization

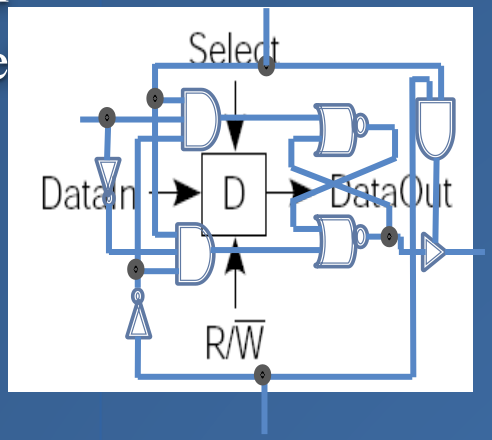

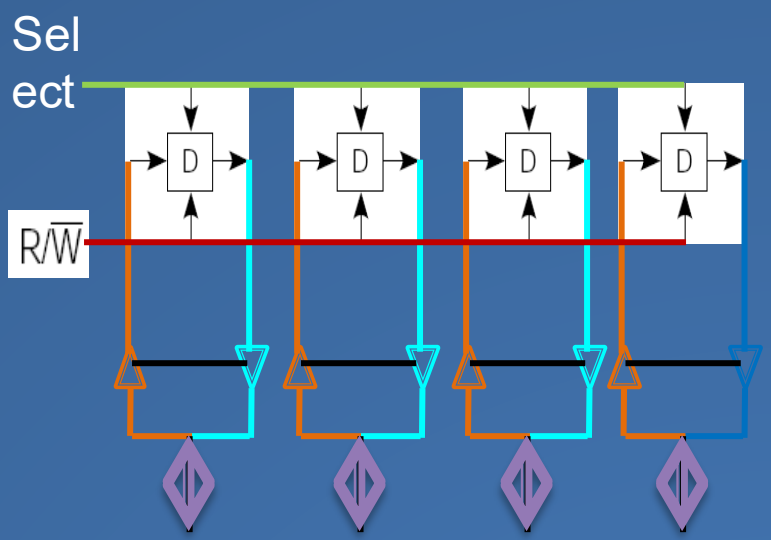

- Truth tables of logic gates
- circuitry of memory cell
- Function of Memory C
- Memory Organization

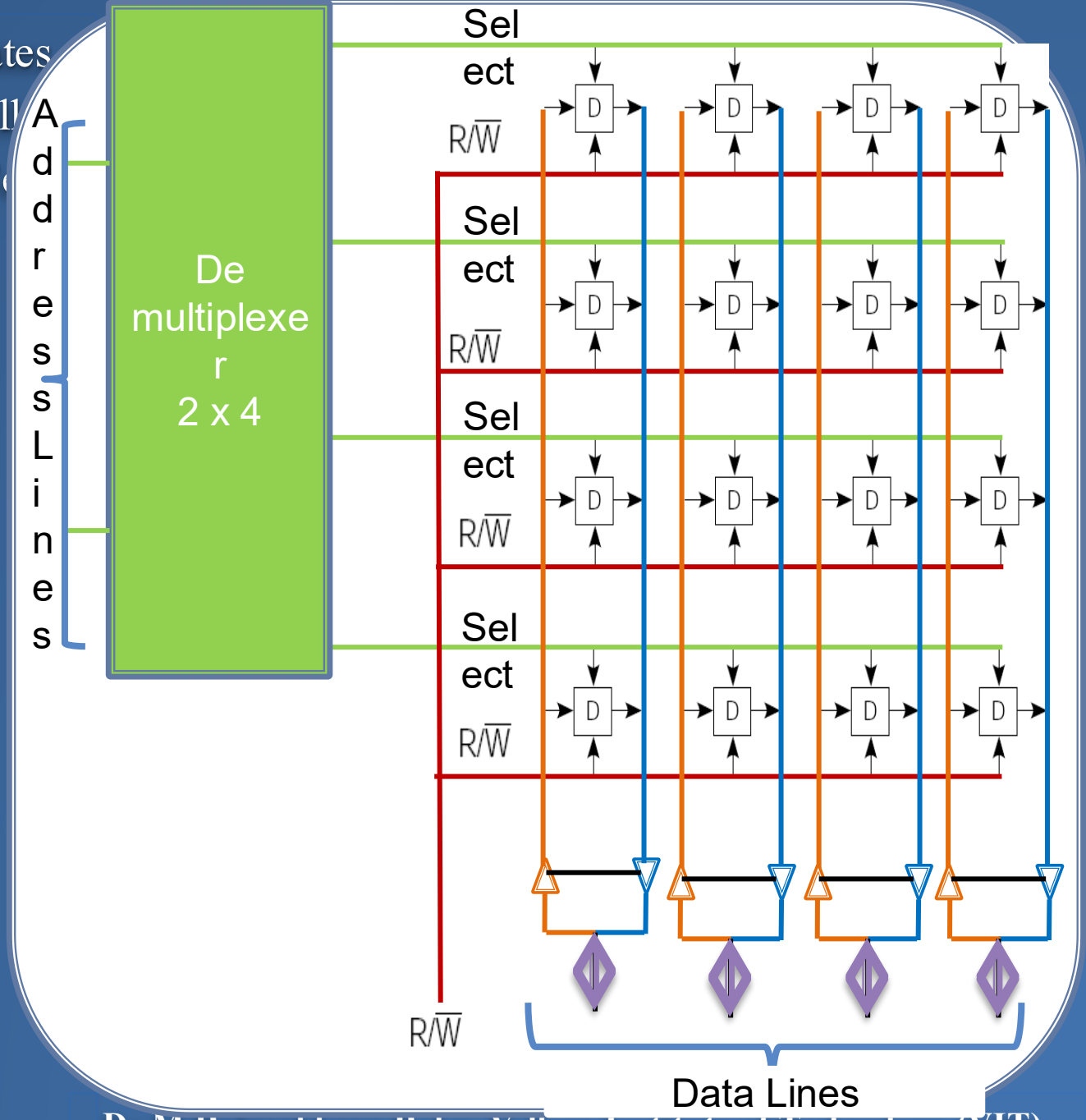

- Truth tables of logic gates
- circuitry of memory cell
- Function of Memory C
- Memory Organization,
- Chip layout

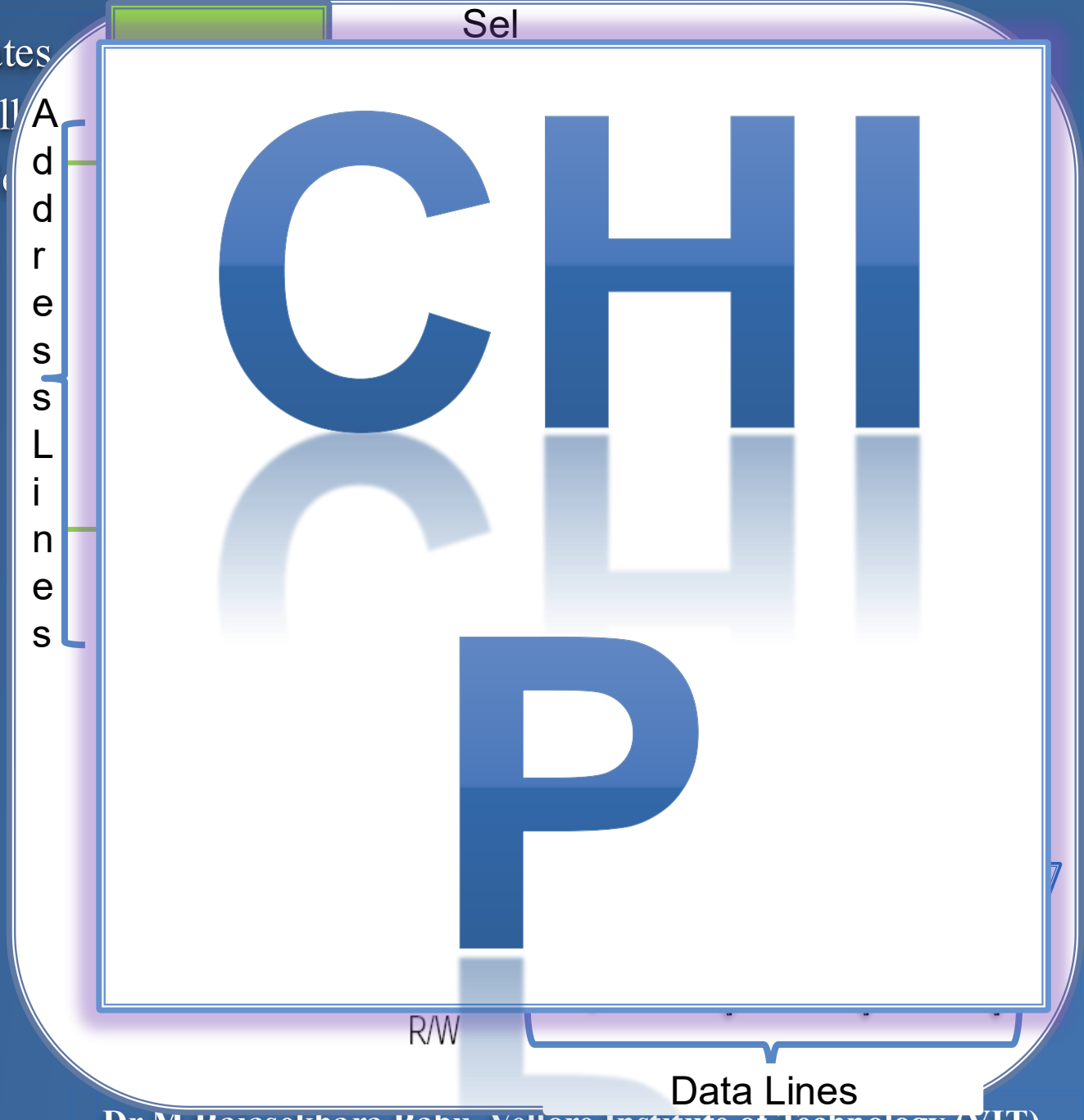

- Truth tables of logic gates
- circuitry of memory cell
- Function of Memory Cell
- Memory Organization
- Chip layout

Typical Chip Layout

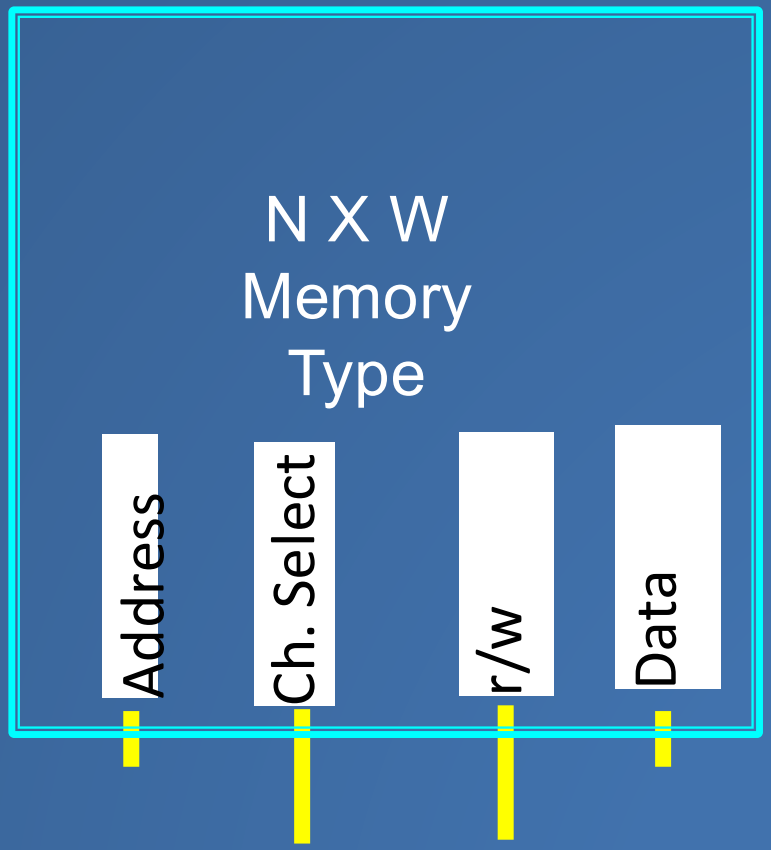

MEMORY INTERLEAVING

- Memory Interleaving

- If the Main Memory is structured as collection of physically separate modules.
  - Each with it's own Address Buffer Register (ABR) and Data Buffer Register (DBR), memory access operations.
  - It may proceed in more than one module at the same time.

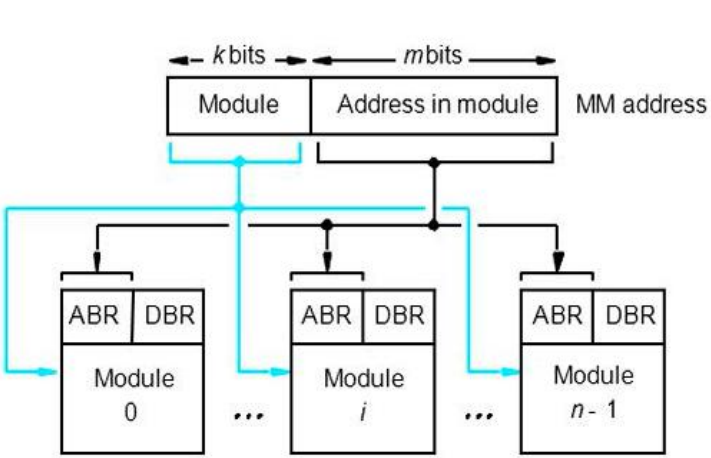

(a) Consecutive words in a module

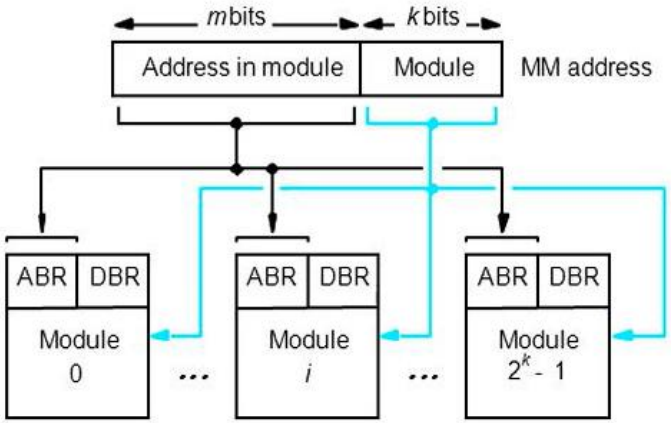

(b) Consecutive words in consecutive modules

MEMORY INTERLEAVING

- Memory Interleaving

- Memory Interleaving is an abstraction technique.
- Designed to compensate for core memory by spreading memory addresses evenly across memory banks.
- Divides memory into a number of modules such that successive words in the address space are placed in the different module.

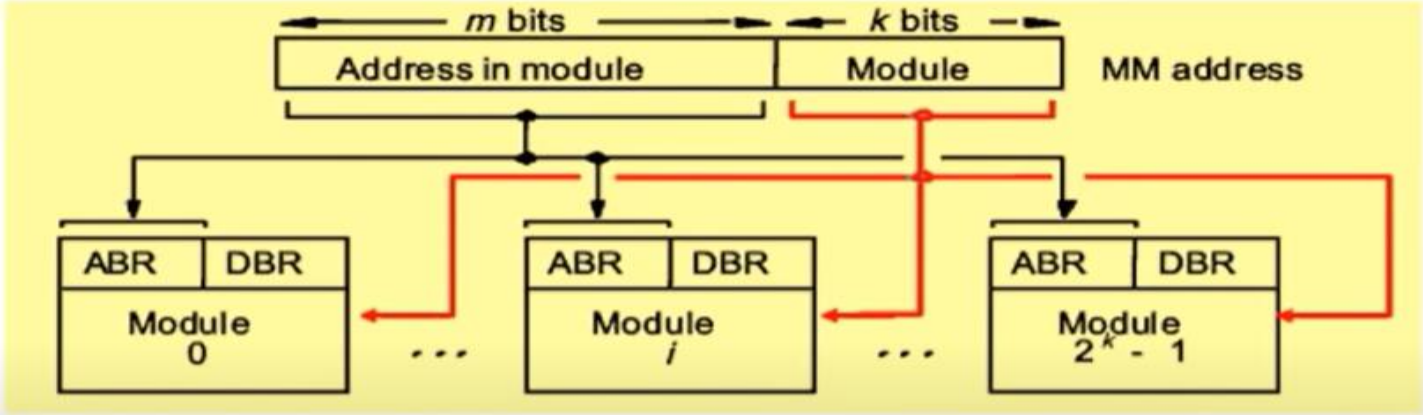

Distribution Methods in Memory system

- Memory Interleaving
- Distribution Methods in Memory system

- **Consecutive words in a module**
  - **When consecutive locations are accessed, as happens when a block of data is transferred to a cache, only one module is involved.**

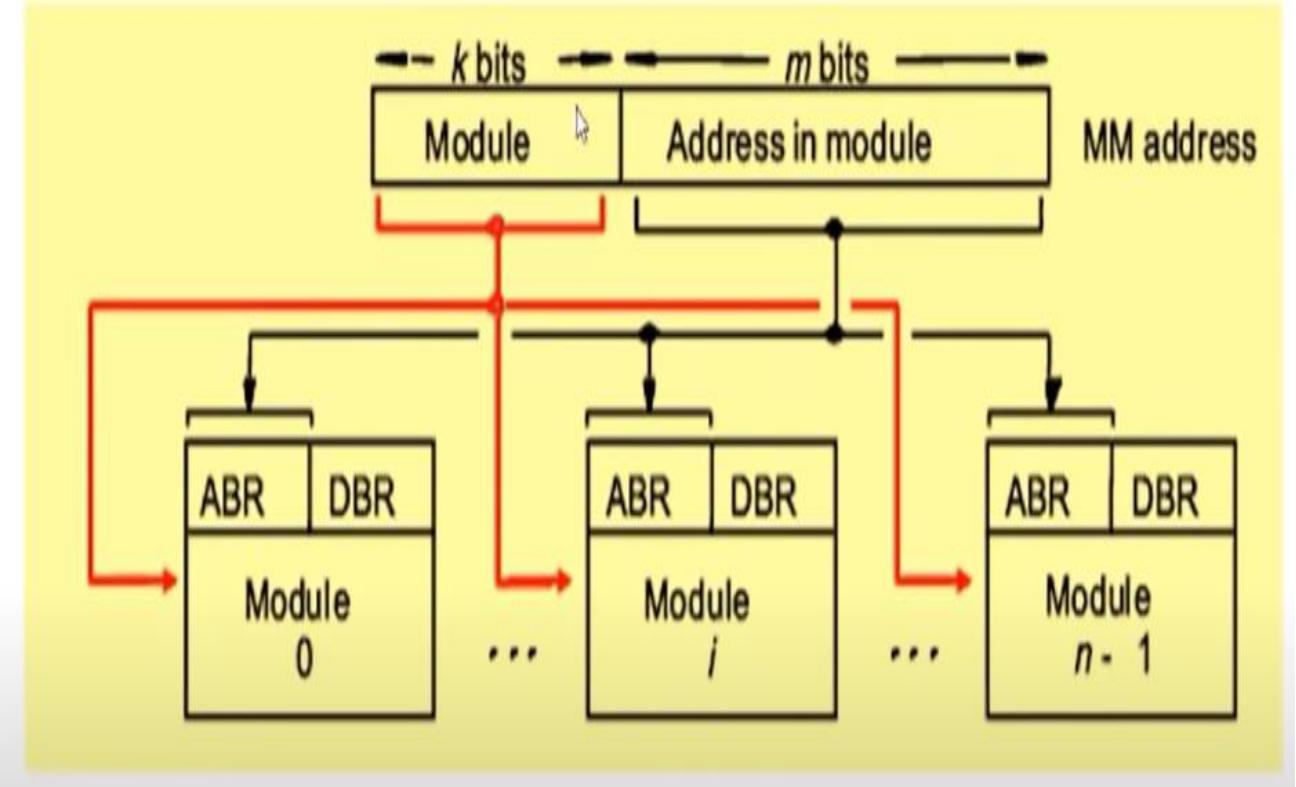

Distribution Methods in Memory system

- Memory Interleaving
- Distribution Methods in Memory system

- **Consecutive words in a Consecutive module**
  - **This method is called memory interleaving**
  - **Parallel access is possible. Hence, faster**

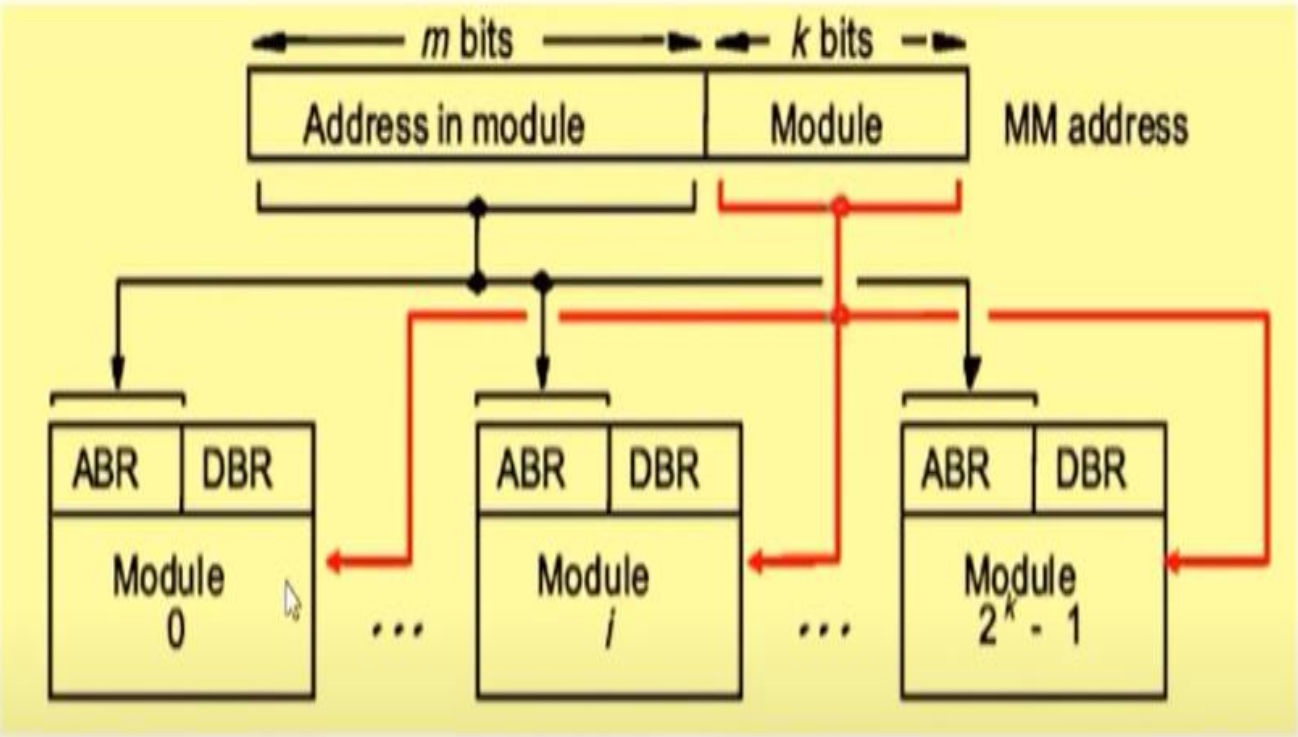

Distribution Methods in Memory system

- Memory Interleaving
- Distribution Methods in Memory system

- **Consecutive words in a module**

Lower order bits

Higher order bits

0000	10
0001	20
0010	30
0011	40
0100	50
0101	60
0110	70
0111	80
1000	90
1001	100
1010	110
1011	120
1100	130
1101	140
1110	150
1111	160

	Module 00
00	10
01	20
10	30
11	40

	Module 01
00	50
01	60
10	70
11	80

	Module 10
00	90
01	100
10	110
11	120

	Module 11
00	130
01	140
10	150
11	160

Distribution Methods in Memory system

- Memory Interleaving
- Distribution Methods in Memory system

Consecutive words in a Consecutive

Lower order bits

Higher order bits

0000	10
0001	20
0010	30
0011	40
0100	50
0101	60
0110	70
0111	80
1000	90
1001	100
1010	110
1011	120
1100	130
1101	140
1110	150
1111	160

	Module 00
00	10
01	50
10	90
11	130

	Module 01
00	20
01	60
10	100
11	140

	Module 10
00	30
01	70
10	110
11	150

	Module 11
00	40
01	80
10	120
11	160

Usage of Memory Interleaving

- Memory Interleaving
- Distribution Methods in Memory system
- Usage of Memory Interleaving

- Main memory is relatively slower than the cache.
- So to improve the access time of the main memory, interleaving is used.

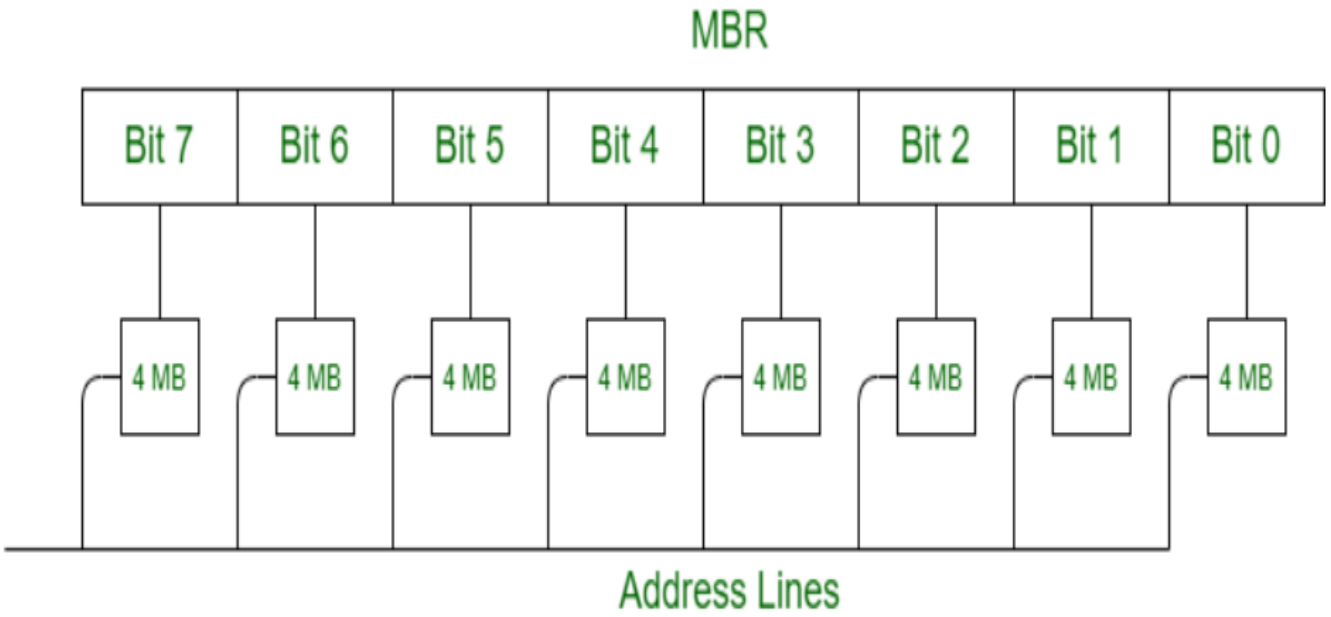

Classification of Memory Interleaving

- Memory Interleaving
- Distribution Methods in Memory system
- Usage of Memory Interleaving
- Classification of Interleaving

Memory interleaving is classified into two types:

Two address formats for Memory Interleaving.

1. High Order Interleaving –

- In high-order interleaving, the most significant bits of the address select the

Address bits	25-22	21-0
Use	Bank Select	Address to the chip

Module 0	Module 1	Module 2	Module 3	Module 4	Module 5	Module 6	Module 7
0	4	8	12	16	20	24	28
1	5	9	13	17	21	25	29
2	6	10	14	18	22	26	30
3	7	11	15	19	23	27	31

Classification of Memory Interleaving

- Memory Interleaving
- Distribution Methods in Memory system
- Usage of Memory Interleaving
- Classification of Interleaving

2. Low Order Interleaving –

- In low-order interleaving, the least significant bits select the memory bank (module).
- In this, consecutive memory addresses are in different memory modules.
- This allows memory access at much faster

Address bits	25-4	3-0
Use	Address to the chip	Bank Select

Module 0	Module 1	Module 2	Module 3	Module 4	Module 5	Module 6	Module 7
0	1	2	3	4	5	6	7
8	9	10	11	12	13	14	15
16	17	18	19	20	21	22	23
24	25	26	27	28	29	30	31

Benefits of Memory Interleaving

- Memory Interleaving
- Distribution Methods in Memory system
- Usage of Memory Interleaving
- Classification of Interleaving
- Benefits of Memory Interleaving

- It allows simultaneous access to different modules of memory.
- Interleave memory is useful in the system with pipelining and vector processing.
- In an interleaved memory, consecutive memory addresses are spread across different memory modules.
- Reduce the memor
close to the numbe

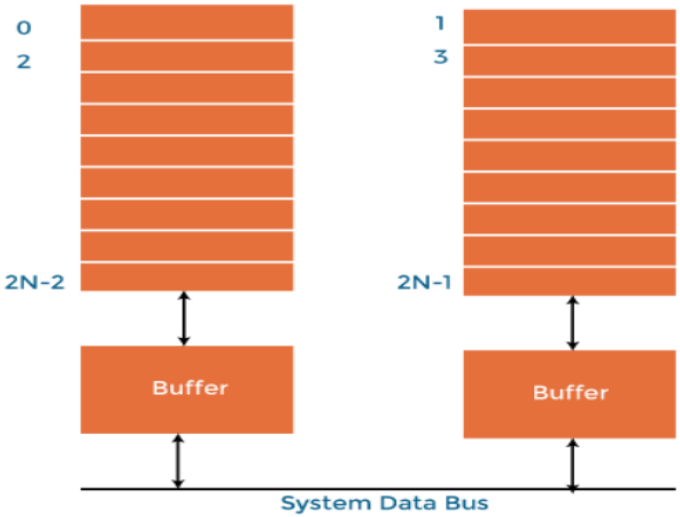

Interleaving DRAM

- Memory Interleaving
- Distribution Methods in Memory system
- Usage of Memory Interleaving
- Classification of Interleaving
- Benefits of Memory Interleaving
- Interleaving DRAM

- Main memory is usually composed of a collection of DRAM (Dynamic random-access memory) memory chips grouped together to form a memory bank.
- The memory banks will be interleaved.
- Memory accesses to different banks can proceed in parallel with high throughput.
- Memory banks can be allocated a contiguous block of memory addresses.

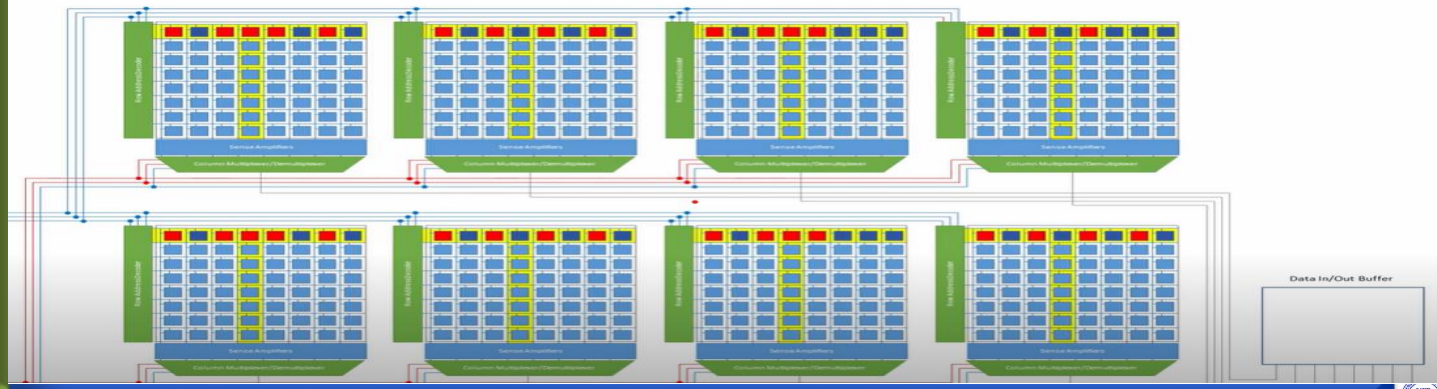

Comparison of Size, Cost/bit and Access Time for Memory Hierarchy

- Memories importance, Memories organization
- Memory Hierarchy: CPU registers, Cache Memory, Main memory, Auxiliary memory
- CPU Registers → Ax.M: Size: Increases,
  - Access Time: Decreases, Cost/Bit: Decreases

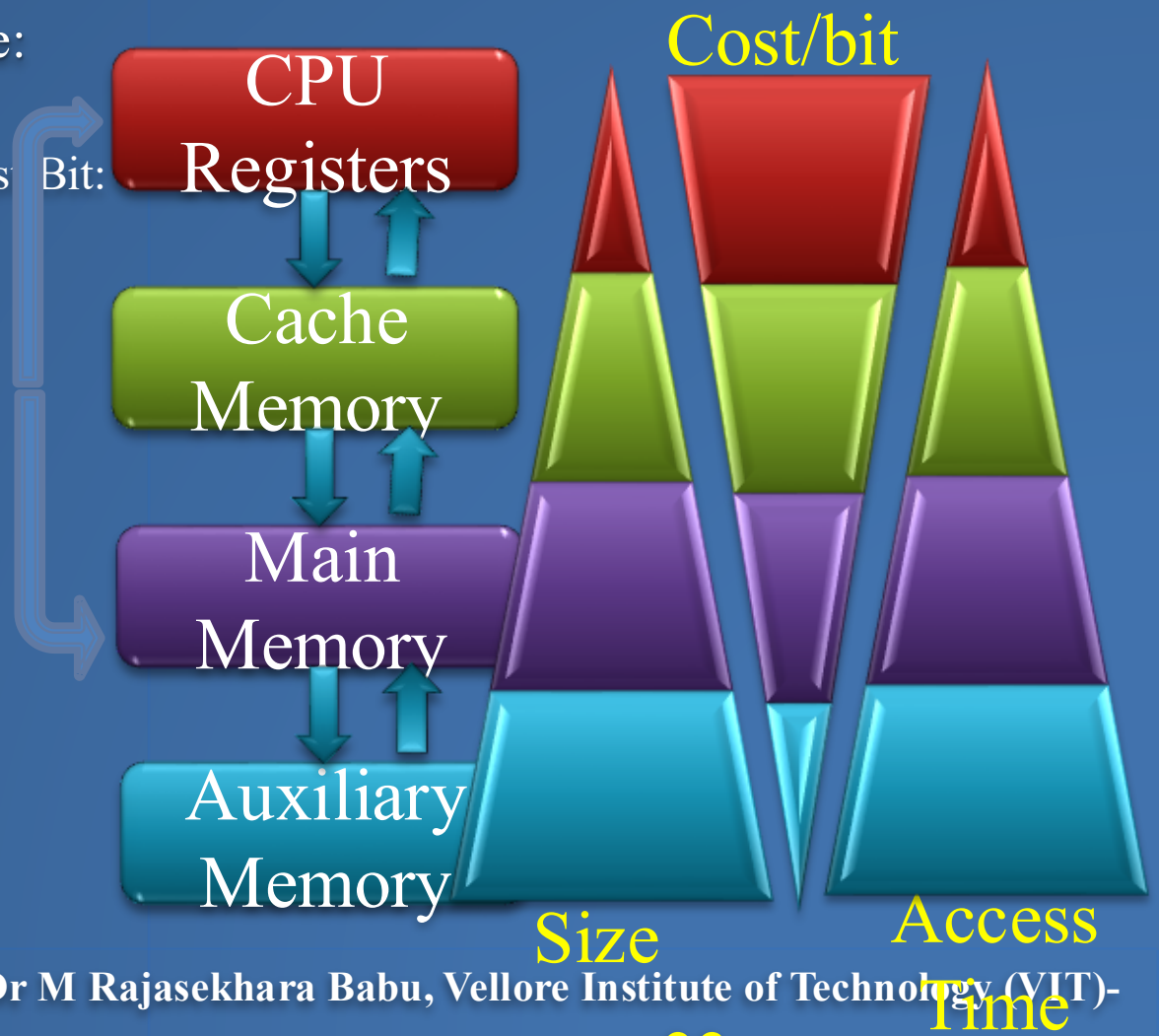

Problem

Consider a main memory system that consists of 8 memory modules attached to the system bus, which is one word wide. When a write request is made, the bus is occupied for 100 nanoseconds (ns) by the data, address, and control signals. During the same 100 ns, and for 500 ns thereafter, the addressed memory module executes one cycle accepting and storing the data. The (internal) operation of different memory modules may overlap in time, but only one request can be on the bus at any time. The maximum number of stores (of one word each) that can be initiated in 1 millisecond is?

Summary

- Memory Interleaving
  - Consecutive words in a module
  - Consecutive words in consecutive module
- Usage of Memory Interleaving
  - Main Memory
  - Cache
- Classification of Memory Interleaving
  - High Order Interleaving
  - Low Order Interleaving
- Benefits of Memory Interleaving
- Interleaving DRAM
- Examples

References

T1: W. Stallings, "Computer Organization and Architecture: Design for Performance", 10th edition, PHI, 2016.

Chapter 5

T2: David A. Patterson and John L. Hennessy, "Computer Organization and Design: The Hardware/Software Interface", 5th Edition, Morgan Kaufmann, Elsevier, 2011.

T3: Carl Hamacher, "Computer Organization and Embedded Systems", 6th Edition, McGraw Hill Higher Education, 2011.

Web: